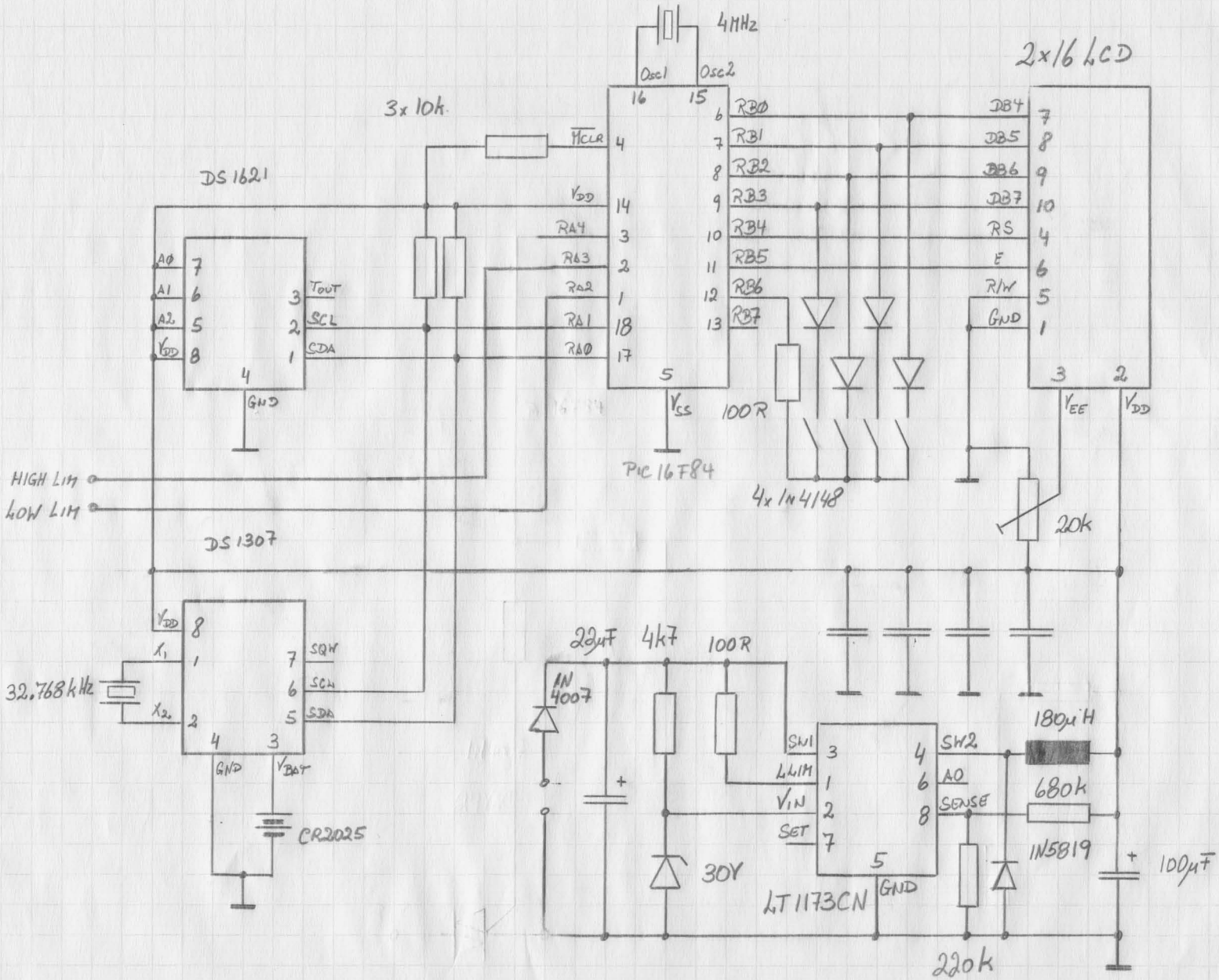


THERMOSTAT

ADI LINDEN, 98-03-21